CPD20 TV8

SILVERSTONE MOTVIKTSTRUCK 2,0 TON, 3-HJULIG, ELEKTRISK

VECTUR

CPD20 TV8 MOTVIKTSTRUCK

Med sin enastående premiumkonfiguration har denna truck en fantastisk prestanda.

Art.nr. CPD20-TV8

TEKNISK INFORMATION
Motor - Komplett AC kör- och lyftsystem
Kontroller - ZAPI Italien
Kapacitet - 2000 kg
Mast: - Duplex 3,3 m eller Triplex 5 m eller 5,5 m
Sidshift - Ja
Däck - Solida däck
Gaffellängd - 1200mm
Batteri - 600AH/48V
Centralt fyllsystem - Ja
Laddare - 48V/80A
Suspensionssits med OPS - Ja

SPECIFIKATION
Dragmotor - kW, kapacitet 2x4,8 - (DC/AC) AC från SCHABMULLER, Tyskland
Pumpmotor - kW, kapacitet 11 / (DC/AC) AC från Kina
Dragkontroll - Kondition 48V/320+320A (DC/AC) AC, typ DUAL AC2 från ZAPI Italien
Pumpkontroller - Kondition 36-48V/450A (DC/AC) AC, typ AC2 från ZAPI Italien
Batteribox (Standard) - (V/Ah) 48/600 från Kina
Växellåda - Typ GP21 från ZF,Tyskland
Styraxel, ventil, redirector, sits - från Kina
Växelpump - från Japan
Display - Typ FC5111 från ZAPI Italien
Accelerator - Typ FZ3-152-341C från Korea
Connector - från AMP, USA

CPD20 TV8

SILVERSTONE MOTVIKTSTRUCK 2,0 TON, 3-HJULIG, ELEKTRISK

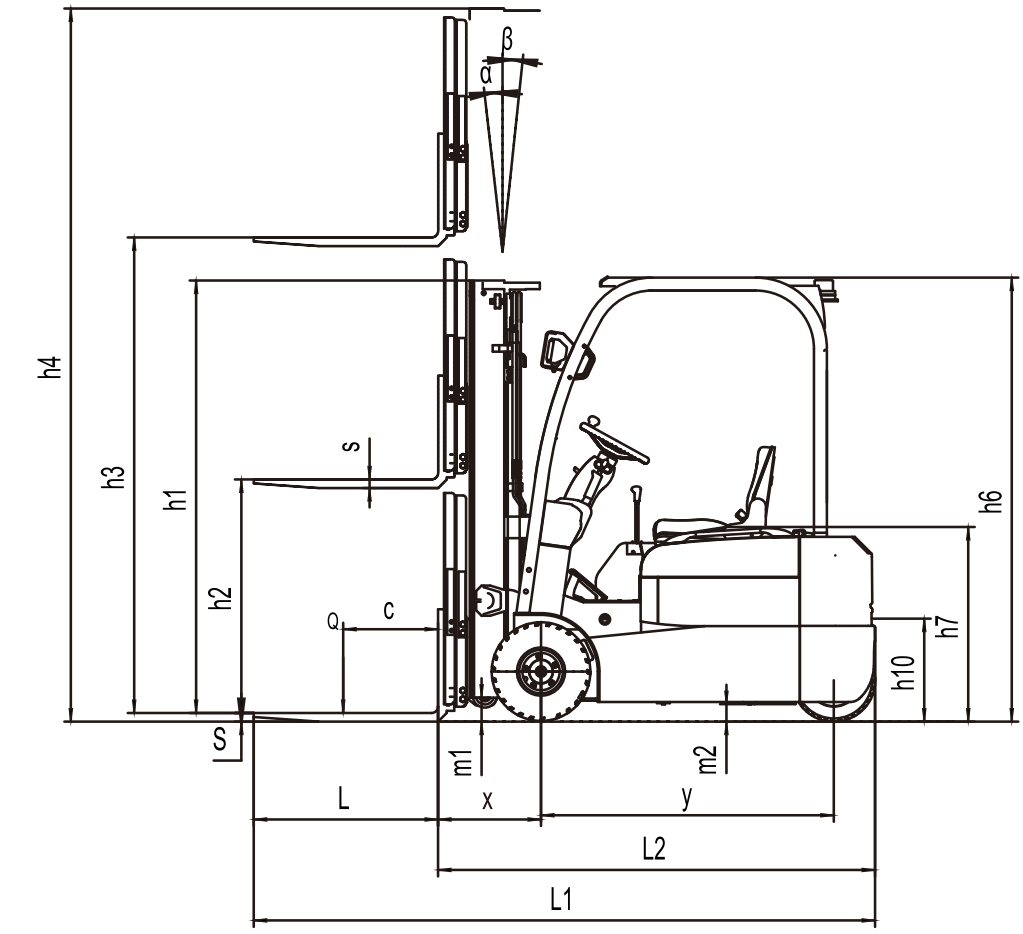

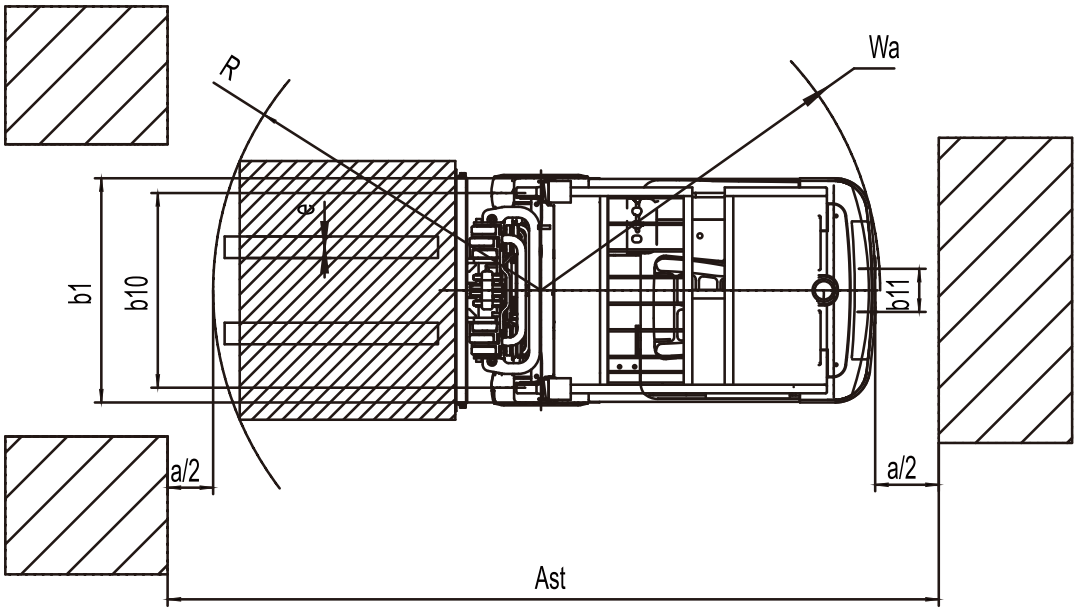

CPD20 TV8

SILVERSTONE MOTVIKTSTRUCK 2,0 TON, 3-HJULIG, ELEKTRISK

VECTUR

1.2	Model designation			CPD20TV8
1.3	Drive unit			Electric
1.4	Operator type			seated
1.5	rated capacity	Q	t	2
1.6	Load center distance	c	mm	500
1.8	Load distance，centre of drive axle to fork	x	mm	397.5
1.9	Wheelbase	y	mm	1468
Weight				
2.1	Service weight （include battery）		kg	3430
2.2	Axle loading, laden driving wheels /steering		kg	5050/380
2.3	Axle loading, unladen driving wheels /steering		kg	1750/1680
Types,Chassis				
3.1	Tyre type,driving wheels /steering wheels			solid rubber
3.2	Tyre size, driving wheels			200X50-10
3.3	Tyre size, steering wheels			15X4.5-8
3.5	Wheels, number driving/steering (x=drive wheels)		mm	2x/ 2
3.6	Tread, Driving wheels	b_{10}	mm	902
3.7	Tread, Steering wheels	b_{11}	mm	175
Dimensions				
4.1	Tilt of mast/fork carriage forward/backward	α/ β (°)		6/6.5
4.2	Height, mast lowered	h_1	mm	2060
4.3	Free lift （load backrest）	h_2	mm	120
4.4	Lift height	h_3	mm	3000
4.5	Height, mast extended	h_4	mm	4011
4.7	Height of overhead guard (cabin)	h_6	mm	2060
4.8	Seat height	h_7	mm	855
4.12	Tow center of pin height	h_{10}	mm	475
4.19	Overall length	l_1	mm	3125
4.20	Length to face of forks	l_2	mm	2055
4.21	Overall width	b_1/ b_2	mm	1150
4.22	Fork dimensions	s/ e/ l	mm	40×100×920
4.23	Fork carriage class/type A, B			A
4.24	Fork carriage width	b_3	mm	1040
4.31	Ground clearance, laden, below mast	m_1	mm	108
4.32	The minimum ground clearance of frame	m_2	mm	78
4.34.1	Aisle width for pallets 1000 × 1200 crossways	Ast	mm	3400
4.34.2	Aisle width for pallets 800 × 1200 lengthways	Ast	mm	3526
4.35	Turning radius	Wa	mm	1680

CPD20 TV8

SILVERSTONE MOTVIKTSTRUCK 2,0 TON, 3-HJULIG, ELEKTRISK

VECTUR

Performance data			
5.1	Travel speed, laden/ unladen	km/ h	13/ 14
5.2	Lifting speed, laden/ unladen	m/ s	0.26/ 0.43
5.3	Lowering speed, laden/ unladen	m/ s	0.44/ 0.435
5.5	Drawbar pull, laden/unladen	N	/
5.6	Max. drawbar pull, laden/unladen (time)	N	/
5.7	Gradeability, laden/unladen	%	10.5/ 14.5
5.8	Max. gradeability, laden/unladen	%	
5.10	Service brake type		Mechanical/ hydraulic
	park brake type		Mechanical/ hydraulic
Electric-engine			
6.1	Drive motor rating S2 60 min	kW	4.8x2
6.2	Lift motor rating at S3 15%	kW	11
6.3	The maximum allowed size battery	mm	/
6.4	Battery voltage/nominal capacity K5		48/600
6.5	Battery weight	kg	1003
Addition data			
8.1	Type of drive unit		AC
10.5	Steering type		Mechanical/ hydraulic
10.7	Sound pressure level at the driver's ear	dB (A)	74